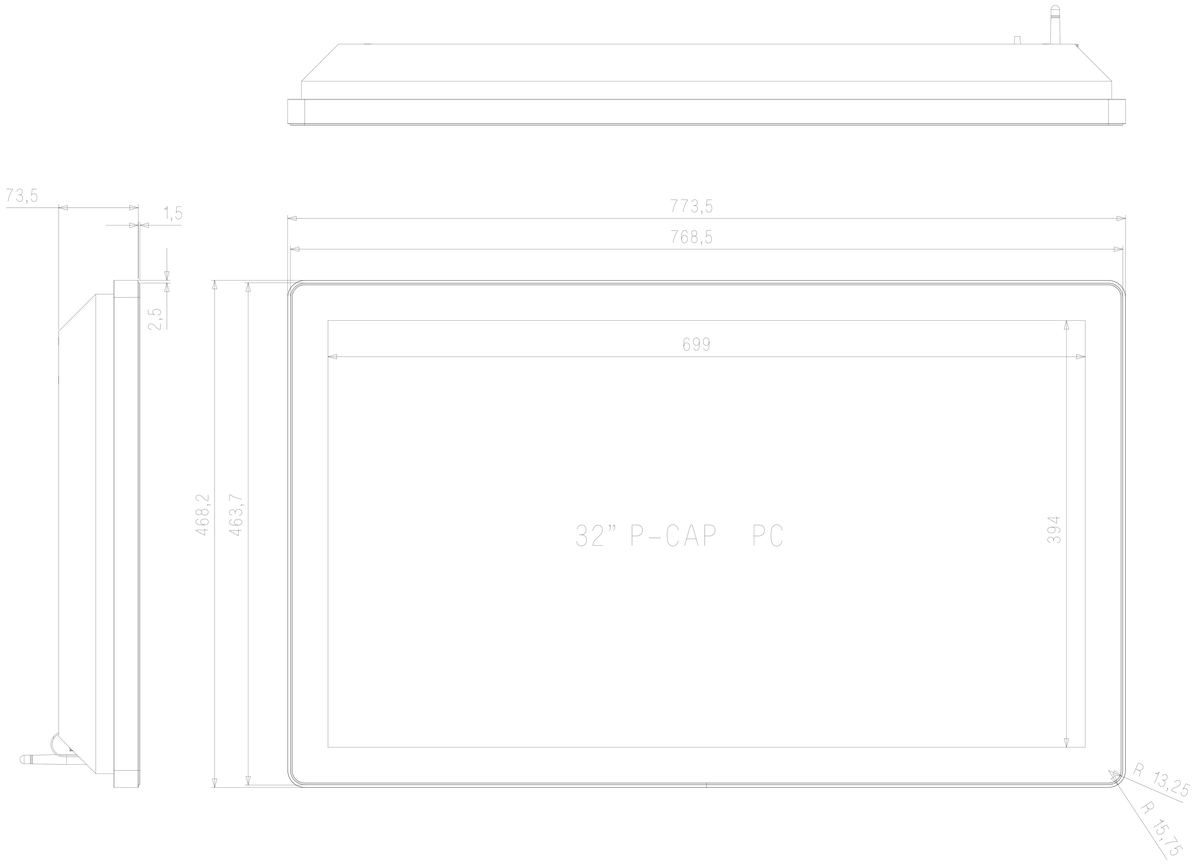

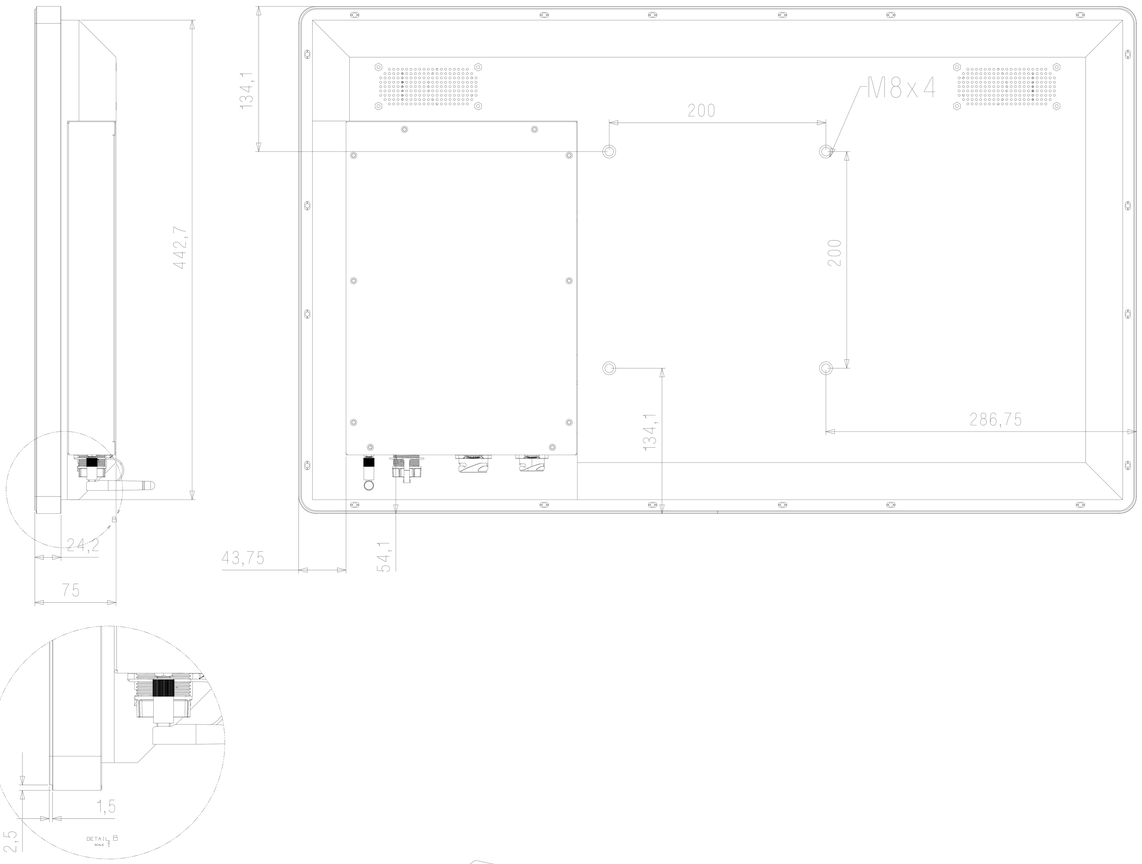

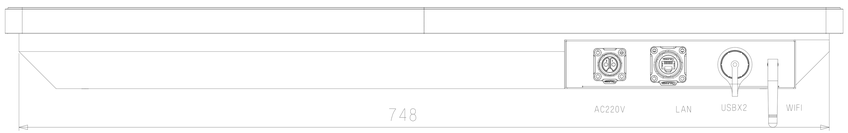

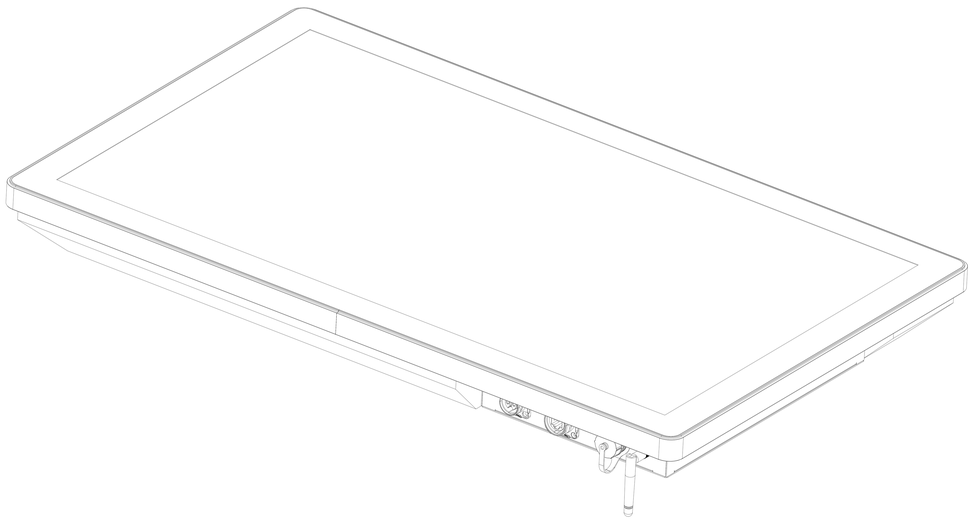

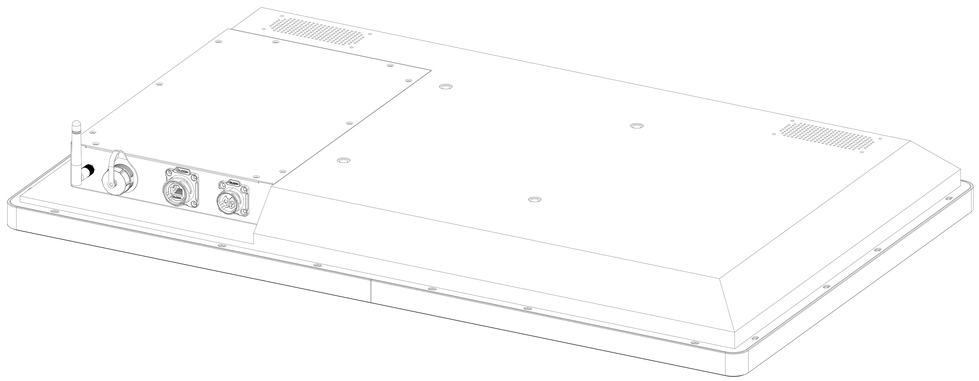

TDD - TPC - BF320DP

2025-02-07