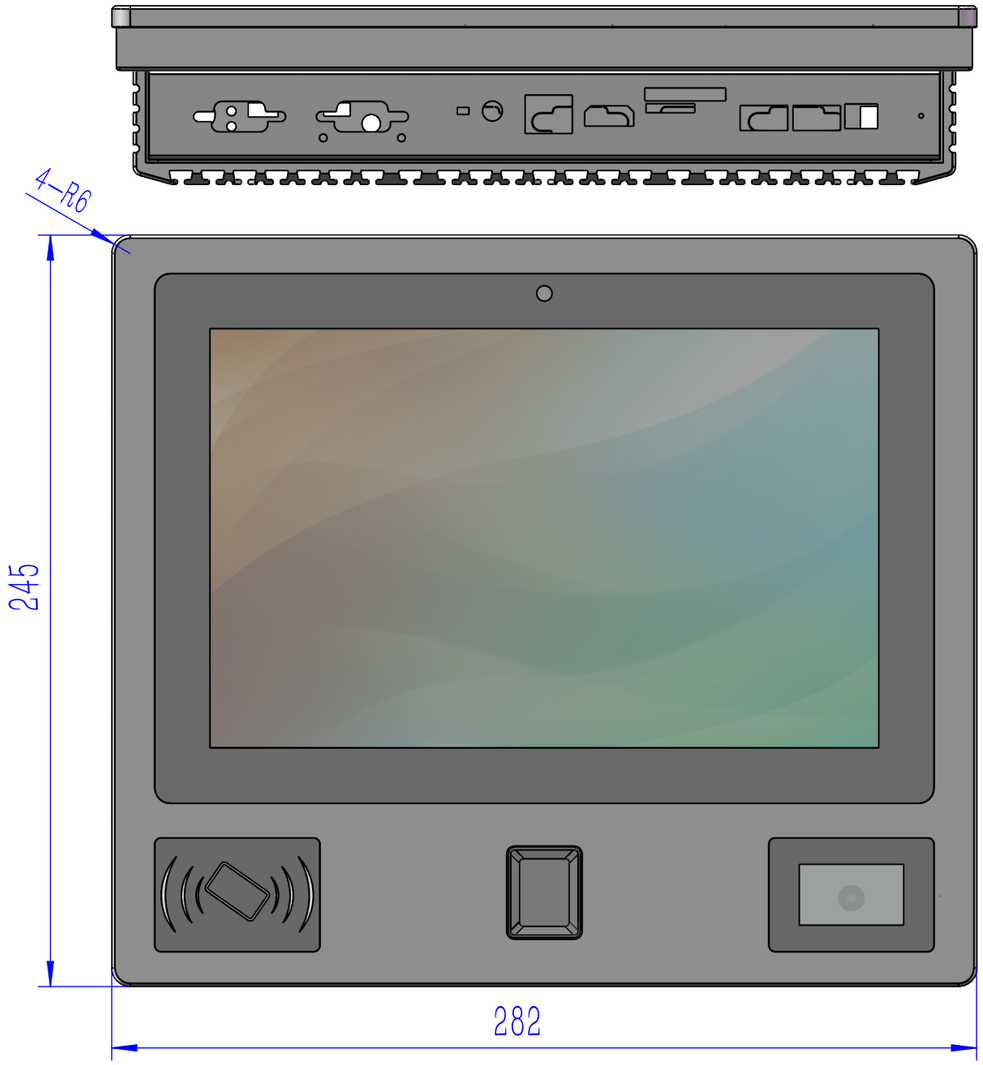

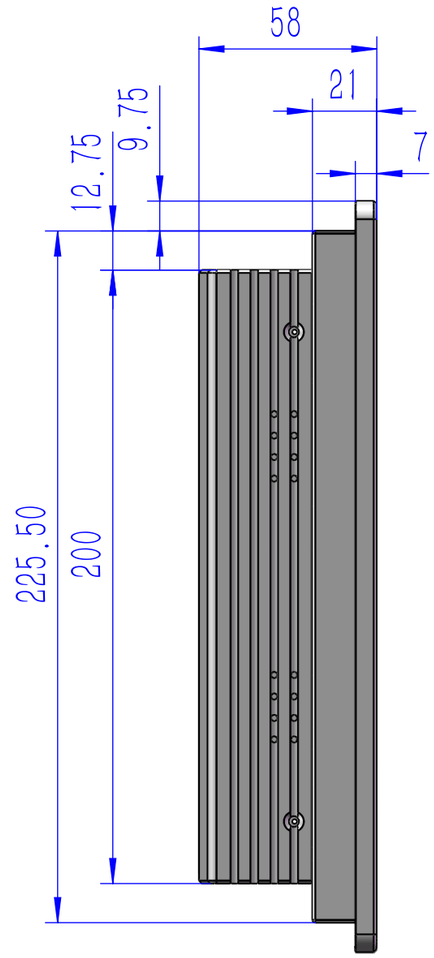

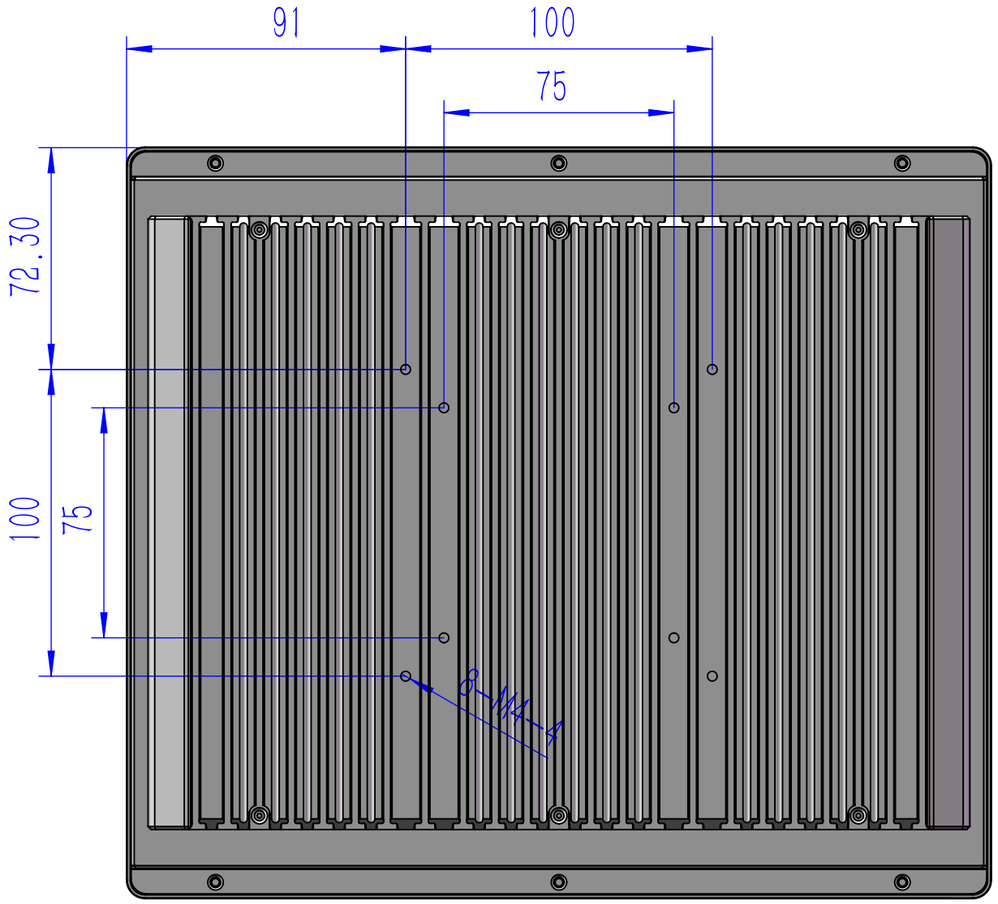

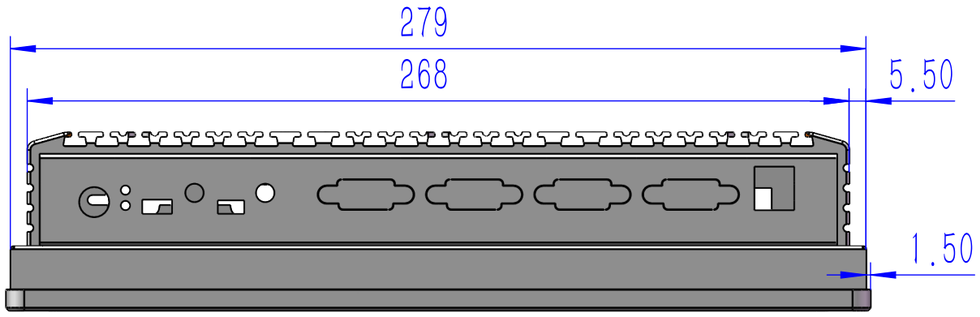

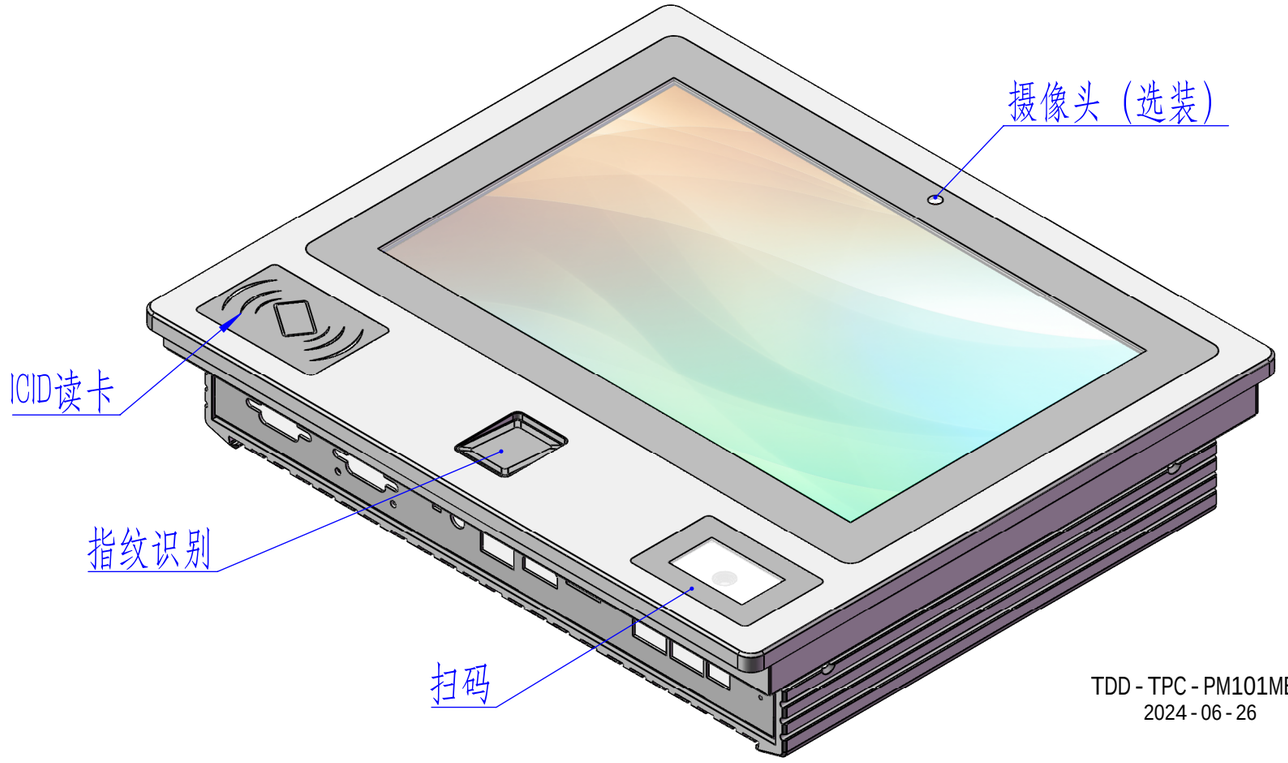

TDD - TPC - PM101MES
2024 - 06 - 26