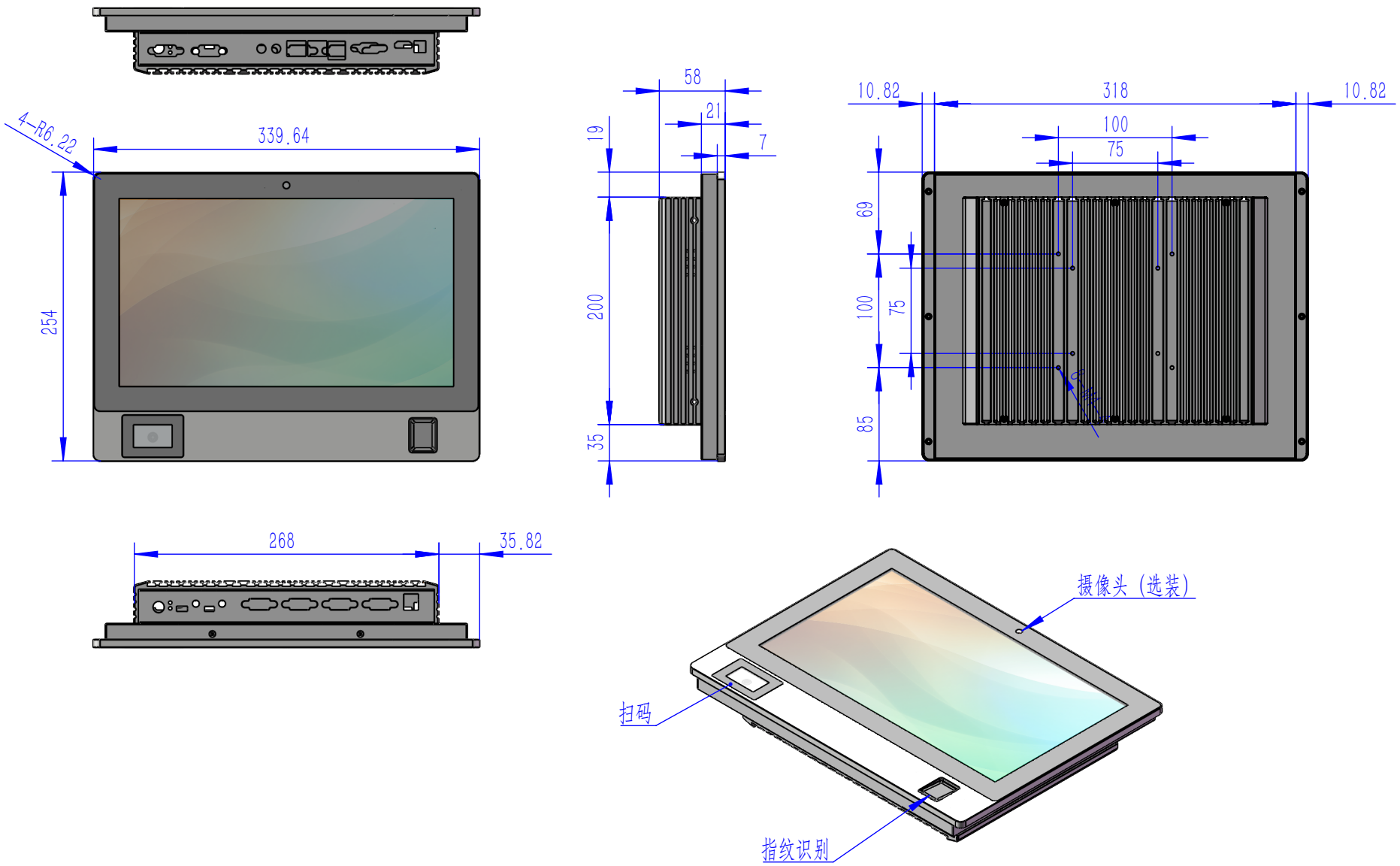

TDD - TPC - PM133MES
2024 - 08 - 03