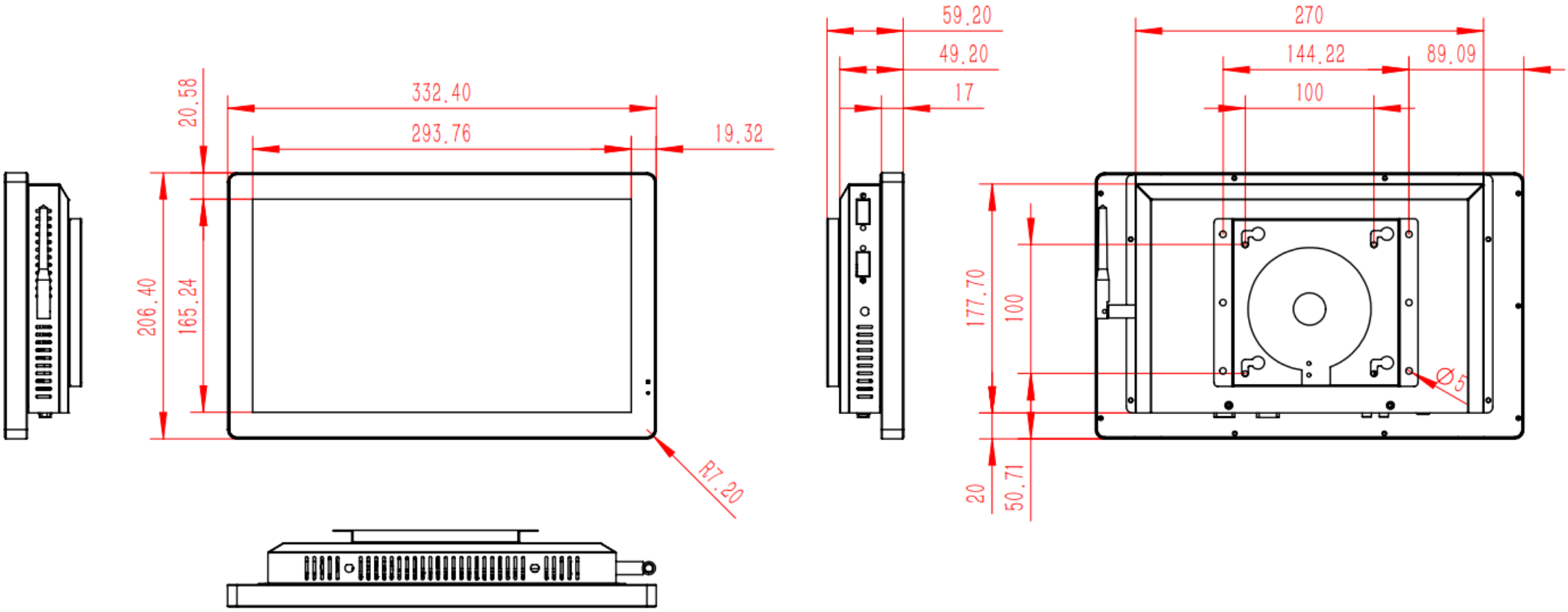

TDD - TDS - CF133
2024 - 09 - 25