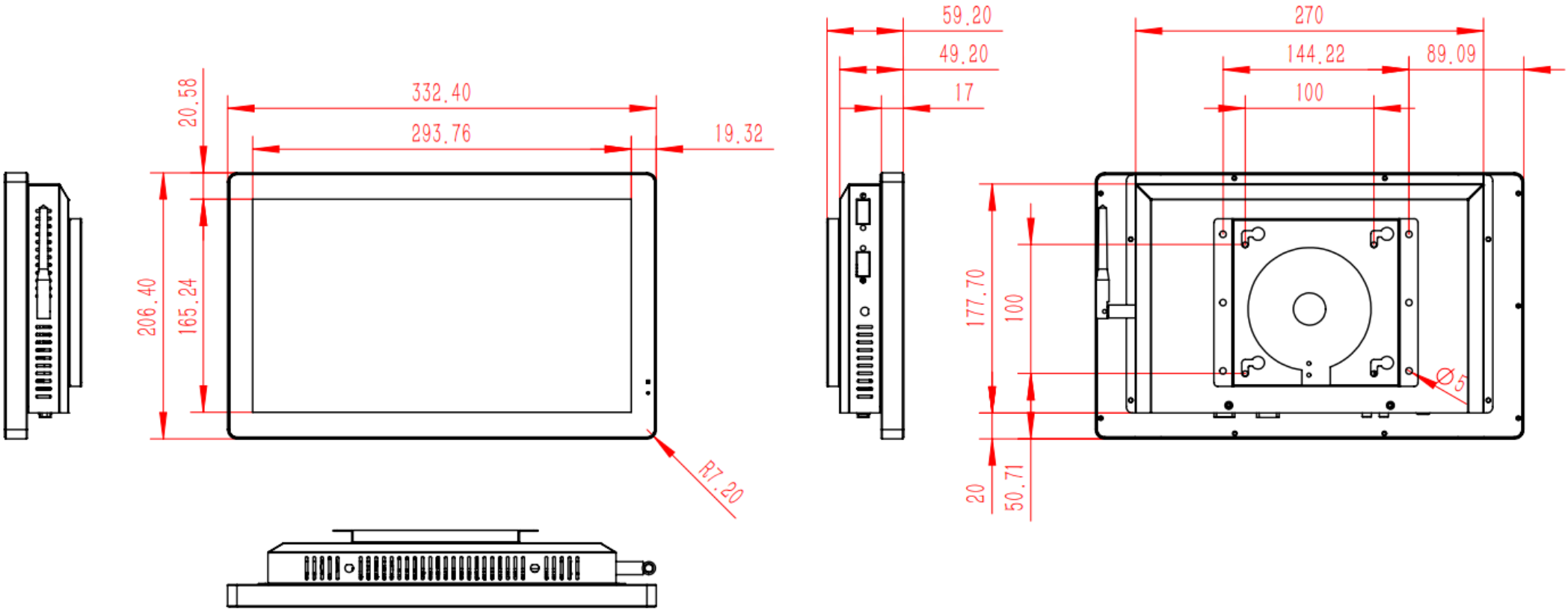

TDD - DTM133
2024 - 09 - 25